# CPG BRANDS

## TRUSTED BRANDS FOR EVERY RV






# PRODUCT CATALOG

2026

Bluetooth®

# Global Entry Locks

KEYLESS ENTRANCE LOCKS

Travel Trailer

Motorhome




## Ultra Pro ES

Bluetooth® Travel Trailer Entrance Lock

TTLBT-46160B-2006-1PK

The Ultra ES Pro is a Bluetooth® Electronic Travel Trailer Lock with a built in LED touchpad for keyless entry. This newly designed lock has a full size handle for an easier grip and a revolutionary integrated deadbolt system that provides added security and extends battery life. Uses one C123 lithium battery. This lock is the new and improved keyless entry option for towable RV's!

- **No cutting!** Ultra ES Pro locks fit in the same door cutout sizes as standard travel trailer entrance door locks. (2.75" wide by 3.75" high)
- **Key-ALike Ready!**

| | |
|---|---|
| Faceplate Dimensions (in) | 6W x 4.75H |
| Cut-Out (in) | 2.75W x 3.75H |
| Door Thickness (in) | 1.5 - 1.75 |
| Color | Black |




## MRL Ultra Pro ES

Bluetooth® Motorhome Entrance Lock

MRLBT-42560-2006-1PK

The MRL Ultra Pro ES is a **Bluetooth®** Electronic Motorhome Entrance Lock with built in touchpad for keyless entry. This lock has a full size handle for an easier grip and a integrated deadbolt system that provides added security and extends battery life. The MRL Ultra Pro ES uses two C123 lithium batteries, is SAE/FMVSS compliant, and has a one year limited warranty.

- **New G500 key series!** MRL Ultra Pro ES locks feature a newly designed, stamped steel automotive style key.

| | |
|---|---|
| Faceplate Dimensions (in) | 5.52W x 8.5H |
| Cut-Out (in) | 4.6W x 6.9H |
| Door Thickness (in) | 1.5 - 1.75 |
| Color | Black |

## Global Link Connect App

Easily control all Global Link and Creative Products (CPG) Ultra ES Pro Smart Locks from your Bluetooth® enabled device with the free Global Link Connect app.

Available on the App Store

GET IT ON Google Play





## Ultra Pro M

TTL-45100-2006-1PK

- *Full size handle for a more comfortable grip*
- *Integrated deadbolt system with lock plunger reduces key cylinder tension*
- *Interior safety release for emergency exit*

| Faceplate Dimensions (in) | 6W x 4.75H |
|---|---|
| Cut-Out (in) | 2.75W x 3.75H |
| Door Thickness (in) | 1.5 -1.75 |
| Color | Black |



## Classic Pro

TTL-43610AL-2006-1PK *(Black)*
TTL-43610AL-9009-1PK *(White)*
TTL-43610-PC-1PK *(Polished Chrome)*

- *Die-cast metal construction*
- *Super durable powder-coated finish*
- *Direct replacement for FIC (Wesco), Bauer, and Trimark standard locks*

| Faceplate Dimensions (in) | 3.5W x 4.5H |
|---|---|
| Cut-Out (in) | 2.75W x 3.75H |
| Door Thickness (in) | 1.5 - 1.75 |
| Color | Black, White, & Polished Chrome |



## Classic Pro 2PACK

TTL-43610AL-2006-2PK *(Black)*
TTL-43610AL-9009-2PK *(White)*
TTL-43610-PC-2PK *(Polished Chrome)*

- *2 Keyed-ALike entry locks for units with multiple entrance doors*
- *Direct replacement for FIC (Wesco), Bauer, and Trimark standard locks*

| Faceplate Dimensions (in) | 3.5W x 4.5H |
|---|---|
| Cut-Out (in) | 2.75W x 3.75H |
| Door Thickness (in) | 1.5 - 1.75 |
| Color | Black, White, & Polished Chrome |



## MRL Pro D

MRL-41510-2006-1PK

- *Motorhome Entry Lock*
- *Fits All Dexter and Some Lippert Doors*
- *Requires Direct Rotary Module (RM) MRL-RM-47502-DRH (Sold Seperately)*

| Faceplate Dimensions (in) | 5.52W x 7.8H |
|---|---|
| Cut-Out (in) | 4.6W x 6.9H |
| Door Thickness (in) | 1.5 |
| Dead Bolt | Standard |
| RM Connection | Direct |
| Color | Black |



## MRL Pro LR1

MRL-41210-2006-1PK

- *Motorhome Entry Lock*
- *Fits Most Lippert and Challenger Doors**
- *Requires Remote Rotary Module (RM) MRL-RM-47501-RRH (Sold Seperately)*

| Faceplate Dimensions (in) | 5.52W x 7.8H |
|---|---|
| Cut-Out (in) | 4.6W x 6.9H |
| Door Thickness (in) | 1.5 |
| Dead Bolt | Extended |
| RM Connection | .5” Off-set Rod |
| Color | Black |



## MRL Pro LR2

MRL-41235-2006-1PK

- *Motorhome Entry Lock*
- *Fits 3500 Series Lippert Doors (2022-Newer)*
- *Requires Remote Rotary Module (RM) MRL-RM-47501-RRH (Sold Seperately)*

| Faceplate Dimensions (in) | 5.52W x 7.8H |
|---|---|
| Cut-Out (in) | 4.6W x 6.9H |
| Door Thickness (in) | 1.5 |
| Dead Bolt | Extended |
| RM Connection | 8° Off-set Rod |
| Color | Black |

# *Global Compartment Locks*

COMPARTMENT/BAGGAGE DOOR LOCKS



# Durable Metal Compartment Locks

## *KEY-ALIKE READY*



**Global Link Compartment Door Locks Come With The G-391 Key That Can Be Keyed-ALike To Any Global Series Key**




***Global PRO*** baggage locks can easily be rekeyed to a more secure key code in the Global G300 or new G500 series. The G300 series has 90 different key codes and the G500 series offers 50 different key codes. Previous industry standard locks, including the CH751 series locks, the 315 and R001 slam latches, leave RV owners more vulnerable with only one common single key code.



## Global Mini Pro

BLL-30301-2006-1PK

- *Sandwich style lock with plunger mounted to the backerplate*
- *Smaller footprint that can replace cam locks with slight door modifications*

| | |
|---|---|
| Faceplate Dimensions (in) | 3.25W x 3.25H |
| Cut-Out (in) | 2.75W x 2.5H |
| Door Thickness (in) | 1.5 - 1.75 |
| Color | Black |




## Global Rotary Pro

BLL-60301-2006-1PK

- *Sandwich style baggage lock with automotive style rotary latch*
- *Durable metal rotary latch housing and components*

| | |
|---|---|
| Faceplate Dimensions (in) | 4.32W x 4.25H |
| Cut-Out (in) | 3.57W x 3.48H |
| Door Thickness (in) | .625 - 1.25 |
| Color | Black |

**Door strikes**

BLS-601-BLK is the standard strike included for most Challenger Legacy doors.

BLS-602-BLK is the strike needed for most LCI Series 8 and 13 doors. This strike is sold separately.



## Global Versa M Pro

BLL-50101-2006-1PK

- *Standard baggage lock with plunger mounted to the faceplate*
- *Replaces: Southco locks keyed to R001 & FIC locks keyed to HF315 and CW415*

| | |
|---|---|
| Faceplate Dimensions (in) | 4.32W x 5.1H |
| Cut-Out (in) | 3.875W x 3.78H |
| Door Thickness (in) | 1.49 |
| Color | Black |



## Global Versa V Pro

BLL-50301-2006-1PK

- *Sandwich style lock with plunger mounted to the backerplate*
- *Replaces Kencon Locks keyed to CK330*



## Global Versa 2M Pro

BLL-50201-2006-1PK
BLL-50201-PC-1PK

- *Remote plunger lock for up to 2 remote latch assemblies (linkage rods and remote latches sold seperately)*



## Global Retro Pro

BLL-40101-2006-1PK

- *Sandwich style baggage lock with plunger mounted to the faceplate*
- *Replaces FIC Slam Locks*

# Global Compression Locks

PIVOT/COMPRESSION/BAR LOCKS



## Waterproof Compression Latch

*Scan to see a 360° view*

- *Waterproof durable metal construction for exterior applications*
- *Adjustable grip range with a 60 mm arm length*

| Part Number | Body | Arm | Cut-Out (in) | Color | Cylinder |
|---|---|---|---|---|---|
| PLLW-C5601-2006-1PK | 98 mm | 60 mm | 1.375W x 3.125H | Black | G391 |

## Pivot Latches

**BODY LENGTHS**

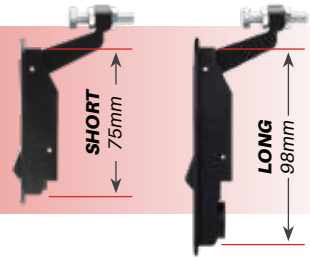


**ARM LENGTHS**

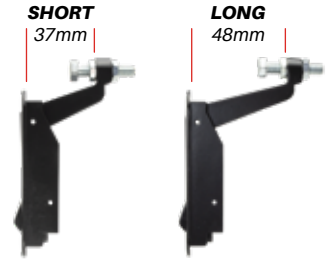




## Locking Pivot Latches

- *Durable metal construction for interior and exterior applications*
- *Long and short arm lengths available*

| Part Number | Body | Arm | Cut-Out (in) | Color | Cylinder |
|---|---|---|---|---|---|
| PL-LSL-10212-2006 | 98 mm | 37 mm | .875W x 3.875H | Black | G308 |
| PL-LSL-10212-3000 | 98 mm | 37 mm | .875W x 3.875H | Silver | G308 |
| PL-LSL-10212-PC | 98 mm | 37 mm | .875W x 3.875H | Polished Chrome | G308 |
| PL-LLL-10214-PC | 98 mm | 48 mm | .875W x 3.875H | Polished Chrome | G308 |



## Non-Locking Pivot Latches

- *Durable metal construction for interior and exterior applications*
- *Long and short arm lengths available*
- *Long and short body lengths available*

| Part Number | Body | Arm | Cut-Out (in) | Color | Cylinder |
|---|---|---|---|---|---|
| PL-LLN-10213-2006 | 98 mm | 48 mm | .875W x 3.875H | Black | NA |
| PL-LLN-10213-3000 | 98 mm | 48 mm | .875W x 3.875H | Silver | NA |
| PL-LLN-10213-PC | 98 mm | 48 mm | .875W x 3.875H | Polished Chrome | NA |
| PL-LSN-10206-2006 | 98 mm | 37 mm | .875W x 3.875H | Black | NA |
| PL-LSN-10206-3000 | 98 mm | 37 mm | .875W x 3.875H | Silver | NA |
| PL-LSN-10206-PC | 98 mm | 37 mm | .875W x 3.875H | Polished Chrome | NA |
| PL-SLN-10205-3000 | 75 mm | 48 mm | .875W x 2.9375H | Silver | NA |
| PL-SSN-10207-3000 | 75 mm | 37 mm | .875W x 2.9375H | Silver | NA |
| PL-SSN-10207-PC | 75 mm | 37 mm | .875W x 2.9375H | Polished Chrome | NA |

# Ramp/Bed Door Compression Locks



## RDCL-850-AL

- *Ramp Door Compression Lock*
- *#850 With KC-SNM-NK-391 Cylinder, No Key*
- *A360 Aluminum Handle And Base*

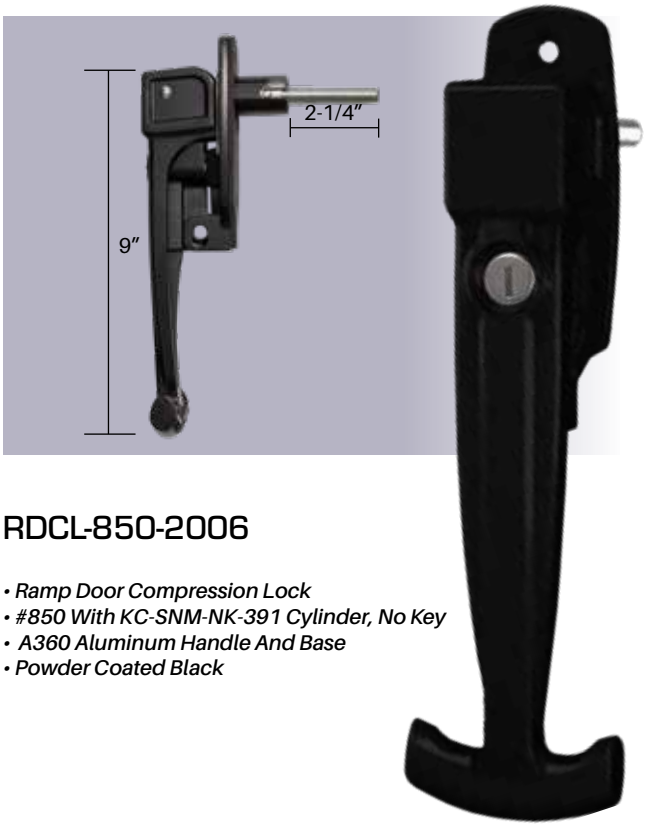


## RDCL-850-2006

- *Ramp Door Compression Lock*
- *#850 With KC-SNM-NK-391 Cylinder, No Key*
- *A360 Aluminum Handle And Base*
- *Powder Coated Black*

# Ramp/Bed Door Bar(Vise) Locks







BL-65611-2006-1PK
BLACK



BL-65611-9009-1PK
WHITE



BL-MTG-KIT
MOUNTING KIT



## *BENEFITS OF Global **PRO** Series **BAR LOCKS***

- Replaces standard hasp locks on ramp doors
- Can be keyed to match ***Global PRO** Series* locks
- All-metal construction with stainless steel components
- Also available in a 2PK

# Global Cam Lock Pro

CAM LOCKS







## ⅞” Cam Locks & Thumb Turns

| Part Number | Description | Color | Cylinder |
|---|---|---|---|
| CLB-391-78-SS-1PK | G391 Standard Cam Lock | Stainless Steel | Mastered, G391 |
| CLB-391-78SI-SS-1PK | G391 Snap-In Hatch Door Cam Lock | Stainless Steel | Mastered, G391 |
| CLB-78-SS | Standard Cam Lock *** | Stainless Steel | Temporary Thumb Turn |
| CLB-78-BLACK | Standard Cam Lock *** | Black | Temporary Thumb Turn |
| CLB-78SI-SS | Snap In Hatch Door Cam Lock *** | Stainless Steel | Temporary Thumb Turn |
| CLB-(Code)-78-SS | Standard Cam Lock with G Series Code | Stainless Steel | Non Mastered, G Series |
| CL-78SI-SS | Hatch Door Cam Lock, Short & Long Arm | Stainless Steel | Non Mastered, G Series |
| CLTT-78-SS-1PK | Thumb Turn Cam Lock | Stainless Steel | Thumb Turn |

## 1⅛” Cam Locks & Thumb Turns

| Part Number | Description | Color | Cylinder |
|---|---|---|---|
| CLB-391-118-SS | G391 Standard Cam Lock | Stainless Steel | Mastered, G391 |
| CLB-118-SS | Standard Cam Lock *** | Stainless Steel | Temporary Thumb Turn |
| CLB-118-BLACK | Standard Cam Lock *** | Black | Temporary Thumb Turn |
| CLB-(Code)-118-SS | Standard Cam Lock with G Series Code | Stainless Steel | Non Mastered, G Series |
| CLB-(Code)-118-BLACK | Standard Cam Lock with G Series Code | Black | Non Mastered, G Series |
| CLSB-391-118-SS | G391 Momentary Switch Cam Lock | Stainless Steel | Mastered, G391 |
| CLTT-118-SS-1PK | Thumb Turn Cam Lock | Stainless Steel | Thumb Turn |
| CLTT-118-BLK-1PK | Thumb Turn Cam Lock | Black | Thumb Turn |

## 1⅜” Cam Locks & Thumb Turns

| Part Number | Description | Color | Cylinder |
|---|---|---|---|
| CLB-391-138-SS | Hatch Door Cam Lock, Short & Long Arm | Stainless Steel | Mastered, G391 |
| CLB-138-SS | Standard Cam Lock *** | Stainless Steel | Temporary Thumb Turn |
| CLB-138-BLACK | Standard Cam Lock *** | Black | Temporary Thumb Turn |
| CLB-(Code)-138-SS | Standard Cam Lock with G Series Code | Stainless Steel | Non Mastered, G Series |
| CLB-(Code)-138-BLACK | Standard Cam Lock with G Series Code | Black | Non Mastered, G Series |
| CLTT-138-SS-1PK | Thumb Turn Cam Lock | Stainless Steel | Thumb Turn |
| CLTT-138-BLK-1PK | Thumb Turn Cam Lock | Black | Thumb Turn |

## 1¾” Cam Locks & Thumb Turns

| Part Number | Description | Color | Cylinder |
|---|---|---|---|
| CLB-391-134-SS | Hatch Door Cam Lock, Short & Long Arm | Stainless Steel | Mastered, G391 |
| CLB-134-SS | Standard Cam Lock *** | Stainless Steel | Temporary Thumb Turn |
| CLB-(Code)-134-SS | Standard Cam Lock with G Series Code | Stainless Steel | Non Mastered, G Series |
| CLTT-134-SS-1PK | Thumb Turn Cam Lock | Stainless Steel | Thumb Turn |

## ⅝” Hatch Door Cam Locks & Thumb Turns

| Part Number | Description | Color | Cylinder |
|---|---|---|---|
| BBT-94150 | Hatch Door Cam Lock, Short Arm | Stainless Steel | CH751 |
| BBT-94151 | Hatch Door Cam Lock, Long Arm | Stainless Steel | CH751 |
| BBT-94156 | Hatch Door Cam Lock, Plastic | White | Thumb Turn |
| BBT-94157 | Hatch Door Cam Lock, Plastic | Black | Thumb Turn |

# Cam Lock PRO

REPLACEMENT CAM LOCK INSTRUCTIONS



**1" TEST BOX** Measure the **"TEST BOX"** to determine if this guide is printed correctly.
***All illustrations are actual size.***

## *Step 1 LOCKS*

**Determine what size lock you need.** Place your current lock on the lock illustrations below for correct lock size. If your lock is a different size, please call us for further assistance.

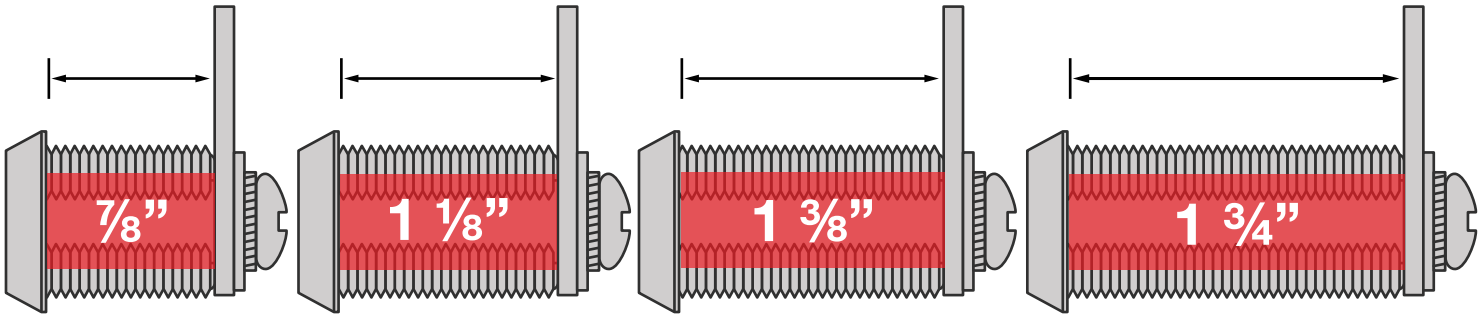


*CLNK-78-SS* *CLNK-118-SS* *CLNK-138-SS* *CLNK-134-SS*

## *Step 2 CAMS* *(Best practice is to reuse your existing cam.)*

**Determine what size cam (locking arm) you need.** Place your current cam on the cam illustrations below for correct cam size. ***You can also measure manually using a ruler and measuring from the center hole of your cam to the longest end.***

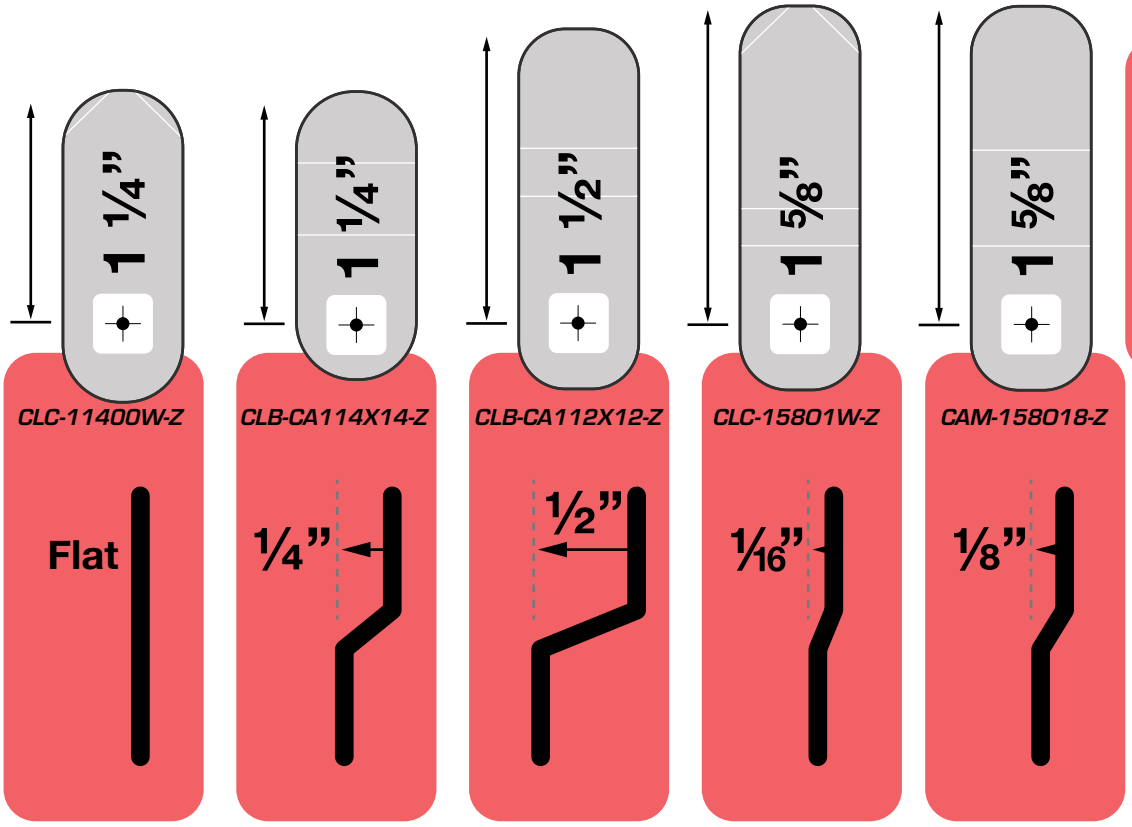


### *BENDS*

***Each cam option shown has a specific offset (bend) as illustrated below. If you have a bend that is larger than 1/2", please call 888-400-3044 for further assistance.***

*INFO@CPGBRANDS.COM*
*888-400-3044*

# Key ALike

DEALER PASS THROUGH PROGRAM



## 1. What is it?

The gray G391 key and cylinder are generic compartment door locks that were designed to be swapped out with a G300 series key code to match GLD entrance locks. ***Scan the qr code to view our G391 introduction video.***

## 2. Removing the Cylinder

Using the Yellow GLD change key from Creative Products Group you can remove any Global cylinder in a matter of seconds without having to remove the entire lock assembly.

## 3. Choose a Key Code

Choose from the list of Global Pro key codes the one in which you would like to key the locks to. (Keys and cylinders are sold separately.)

## 4. Installation

Refer to the installation instructions to reinsert the new cylinder into the cam lock. ***Scan the qr code to view our re-keying instructional video.***

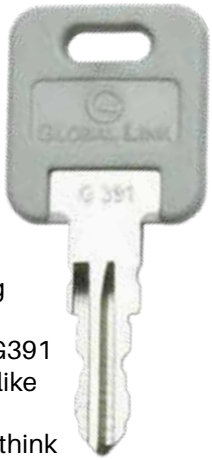

## G391

When talking about the Global Link G391 Dealer Key Alike program, it is important to think of it as the gateway to a new revenue stream that meets an unmet customer need. RV owners desire a more convenient solution to open all exterior locks with a single key. With the Global Link G391 Key ALike program, dealers now have a simple solution to up sell a ***single key system*** to there customers. At its core, the G391 series gives dealers and consumers the possibility of working with 90 different key codes for maximum security and convenience. All tools, installation instructions, and expert guidance necessary are readily available to registered dealers.

## LOCKS TO LOOK FOR

All ***Global PRO*** *Series* locks come standard with the Global Link G391 key. Choose from 90 unique key codes that give RV owners more peace of mind when it comes to security.

***ENTRY*** ***BAGGAGE*** ***BAR*** ***CAM***



***INFO@CPGBRANDS.COM***
***888-400-3044***

# Key/Cylinder Codes Available

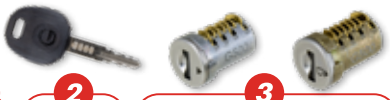

| 1 Code | 2 Key | 3 Mastered Cylinder | Non-Mastered Cylinder |
|---|---|---|---|
| G500 | KEY-G500-1PK | KC-SM-NK-500 | KC-SNM-NK-500 |
| G501 | KEY-G501-1PK | KC-SM-NK-501 | KC-SNM-NK-501 |
| G502 | KEY-G502-1PK | KC-SM-NK-502 | KC-SNM-NK-502 |
| G503 | KEY-G503-1PK | KC-SM-NK-503 | KC-SNM-NK-503 |
| G504 | KEY-G504-1PK | KC-SM-NK-504 | KC-SNM-NK-504 |
| G505 | KEY-G505-1PK | KC-SM-NK-505 | KC-SNM-NK-505 |
| G506 | KEY-G506-1PK | KC-SM-NK-506 | KC-SNM-NK-506 |
| G507 | KEY-G507-1PK | KC-SM-NK-507 | KC-SNM-NK-507 |
| G508 | KEY-G508-1PK | KC-SM-NK-508 | KC-SNM-NK-508 |
| G509 | KEY-G509-1PK | KC-SM-NK-509 | KC-SNM-NK-509 |
| G510 | KEY-G510-1PK | KC-SM-NK-510 | KC-SNM-NK-510 |
| G511 | KEY-G511-1PK | KC-SM-NK-511 | KC-SNM-NK-511 |
| G512 | KEY-G512-1PK | KC-SM-NK-512 | KC-SNM-NK-512 |
| G513 | KEY-G513-1PK | KC-SM-NK-513 | KC-SNM-NK-513 |
| G514 | KEY-G514-1PK | KC-SM-NK-514 | KC-SNM-NK-514 |
| G515 | KEY-G515-1PK | KC-SM-NK-515 | KC-SNM-NK-515 |
| G516 | KEY-G516-1PK | KC-SM-NK-516 | KC-SNM-NK-516 |
| G517 | KEY-G517-1PK | KC-SM-NK-517 | KC-SNM-NK-517 |
| G518 | KEY-G518-1PK | KC-SM-NK-518 | KC-SNM-NK-518 |
| G519 | KEY-G519-1PK | KC-SM-NK-519 | KC-SNM-NK-519 |
| G520 | KEY-G520-1PK | KC-SM-NK-520 | KC-SNM-NK-520 |
| G521 | KEY-G521-1PK | KC-SM-NK-521 | KC-SNM-NK-521 |
| G522 | KEY-G522-1PK | KC-SM-NK-522 | KC-SNM-NK-522 |
| G523 | KEY-G523-1PK | KC-SM-NK-523 | KC-SNM-NK-523 |
| G524 | KEY-G524-1PK | KC-SM-NK-524 | KC-SNM-NK-524 |
| G525 | KEY-G525-1PK | KC-SM-NK-525 | KC-SNM-NK-525 |
| G526 | KEY-G526-1PK | KC-SM-NK-526 | KC-SNM-NK-526 |
| G527 | KEY-G527-1PK | KC-SM-NK-527 | KC-SNM-NK-527 |
| G528 | KEY-G528-1PK | KC-SM-NK-528 | KC-SNM-NK-528 |
| G529 | KEY-G529-1PK | KC-SM-NK-529 | KC-SNM-NK-529 |
| G530 | KEY-G530-1PK | KC-SM-NK-530 | KC-SNM-NK-530 |
| G531 | KEY-G531-1PK | KC-SM-NK-531 | KC-SNM-NK-531 |
| G532 | KEY-G532-1PK | KC-SM-NK-532 | KC-SNM-NK-532 |
| G533 | KEY-G533-1PK | KC-SM-NK-533 | KC-SNM-NK-533 |
| G534 | KEY-G534-1PK | KC-SM-NK-534 | KC-SNM-NK-534 |
| G535 | KEY-G535-1PK | KC-SM-NK-535 | KC-SNM-NK-535 |
| G536 | KEY-G536-1PK | KC-SM-NK-536 | KC-SNM-NK-536 |
| G537 | KEY-G537-1PK | KC-SM-NK-537 | KC-SNM-NK-537 |
| G538 | KEY-G538-1PK | KC-SM-NK-538 | KC-SNM-NK-538 |
| G539 | KEY-G539-1PK | KC-SM-NK-539 | KC-SNM-NK-539 |
| G540 | KEY-G540-1PK | KC-SM-NK-540 | KC-SNM-NK-540 |
| G541 | KEY-G541-1PK | KC-SM-NK-541 | KC-SNM-NK-541 |
| G542 | KEY-G542-1PK | KC-SM-NK-542 | KC-SNM-NK-542 |
| G543 | KEY-G543-1PK | KC-SM-NK-543 | KC-SNM-NK-543 |
| G544 | KEY-G544-1PK | KC-SM-NK-544 | KC-SNM-NK-544 |
| G545 | KEY-G545-1PK | KC-SM-NK-545 | KC-SNM-NK-545 |
| G546 | KEY-G546-1PK | KC-SM-NK-546 | KC-SNM-NK-546 |
| G547 | KEY-G547-1PK | KC-SM-NK-547 | KC-SNM-NK-547 |
| G548 | KEY-G548-1PK | KC-SM-NK-548 | KC-SNM-NK-548 |
| G549 | KEY-G549-1PK | KC-SM-NK-549 | KC-SNM-NK-549 |



| 1 Code | 2 Key | 3 Mastered Cylinder | Non-Mastered Cylinder |
|---|---|---|---|
| G301 | KEY-G301 | KC-SM-NK-301 | KC-SNM-NK-301 |
| G302 | KEY-G302 | KC-SM-NK-302 | KC-SNM-NK-302 |
| G303 | KEY-G303 | KC-SM-NK-303 | KC-SNM-NK-303 |
| G304 | KEY-G304 | KC-SM-NK-304 | KC-SNM-NK-304 |
| G305 | KEY-G305 | KC-SM-NK-305 | KC-SNM-NK-305 |
| G306 | KEY-G306 | KC-SM-NK-306 | KC-SNM-NK-306 |
| G307 | KEY-G307 | KC-SM-NK-307 | KC-SNM-NK-307 |
| G308 | KEY-G308 | KC-SM-NK-308 | KC-SNM-NK-308 |
| G309 | KEY-G309 | KC-SM-NK-309 | KC-SNM-NK-309 |
| G310 | KEY-G310 | KC-SM-NK-310 | KC-SNM-NK-310 |
| G311 | KEY-G311 | KC-SM-NK-311 | KC-SNM-NK-311 |
| G312 | KEY-G312 | KC-SM-NK-312 | KC-SNM-NK-312 |
| G313 | KEY-G313 | KC-SM-NK-313 | KC-SNM-NK-313 |
| G314 | KEY-G314 | KC-SM-NK-314 | KC-SNM-NK-314 |
| G315 | KEY-G315 | KC-SM-NK-315 | KC-SNM-NK-315 |
| G316 | KEY-G316 | KC-SM-NK-316 | KC-SNM-NK-316 |
| G317 | KEY-G317 | KC-SM-NK-317 | KC-SNM-NK-317 |
| G318 | KEY-G318 | KC-SM-NK-318 | KC-SNM-NK-318 |
| G319 | KEY-G319 | KC-SM-NK-319 | KC-SNM-NK-319 |
| G320 | KEY-G320 | KC-SM-NK-320 | KC-SNM-NK-320 |
| G321 | KEY-G321 | KC-SM-NK-321 | KC-SNM-NK-321 |
| G322 | KEY-G322 | KC-SM-NK-322 | KC-SNM-NK-322 |
| G323 | KEY-G323 | KC-SM-NK-323 | KC-SNM-NK-323 |
| G324 | KEY-G324 | KC-SM-NK-324 | KC-SNM-NK-324 |
| G325 | KEY-G325 | KC-SM-NK-325 | KC-SNM-NK-325 |
| G326 | KEY-G326 | KC-SM-NK-326 | KC-SNM-NK-326 |
| G327 | KEY-G327 | KC-SM-NK-327 | KC-SNM-NK-327 |
| G328 | KEY-G328 | KC-SM-NK-328 | KC-SNM-NK-328 |
| G329 | KEY-G329 | KC-SM-NK-329 | KC-SNM-NK-329 |
| G330 | KEY-G330 | KC-SM-NK-330 | KC-SNM-NK-330 |
| G331 | KEY-G331 | KC-SM-NK-331 | KC-SNM-NK-331 |
| G332 | KEY-G332 | KC-SM-NK-332 | KC-SNM-NK-332 |
| G333 | KEY-G333 | KC-SM-NK-333 | KC-SNM-NK-333 |
| G334 | KEY-G334 | KC-SM-NK-334 | KC-SNM-NK-334 |
| G335 | KEY-G335 | KC-SM-NK-335 | KC-SNM-NK-335 |
| G336 | KEY-G336 | KC-SM-NK-336 | KC-SNM-NK-336 |
| G337 | KEY-G337 | KC-SM-NK-337 | KC-SNM-NK-337 |
| G338 | KEY-G338 | KC-SM-NK-338 | KC-SNM-NK-338 |
| G339 | KEY-G339 | KC-SM-NK-339 | KC-SNM-NK-339 |
| G340 | KEY-G340 | KC-SM-NK-340 | KC-SNM-NK-340 |
| G341 | KEY-G341 | KC-SM-NK-341 | KC-SNM-NK-341 |
| G342 | KEY-G342 | KC-SM-NK-342 | KC-SNM-NK-342 |
| G343 | KEY-G343 | KC-SM-NK-343 | KC-SNM-NK-343 |
| G344 | KEY-G344 | KC-SM-NK-344 | KC-SNM-NK-344 |
| G345 | KEY-G345 | KC-SM-NK-345 | KC-SNM-NK-345 |



| 1 Code | 2 Key | 3 Mastered Cylinder | Non-Mastered Cylinder |
|---|---|---|---|
| G-346 | KEY-G346 | KC-SM-NK-346 | KC-SNM-NK-346 |
| G-347 | KEY-G347 | KC-SM-NK-347 | KC-SNM-NK-347 |
| G-348 | KEY-G348 | KC-SM-NK-348 | KC-SNM-NK-348 |
| G-349 | KEY-G349 | KC-SM-NK-349 | KC-SNM-NK-349 |
| G-350 | KEY-G350 | KC-SM-NK-350 | KC-SNM-NK-350 |
| G-351 | KEY-G351 | KC-SM-NK-351 | KC-SNM-NK-351 |
| G-352 | KEY-G352 | KC-SM-NK-352 | KC-SNM-NK-352 |
| G-353 | KEY-G353 | KC-SM-NK-353 | KC-SNM-NK-353 |
| G-354 | KEY-G354 | KC-SM-NK-354 | KC-SNM-NK-354 |
| G-355 | KEY-G355 | KC-SM-NK-355 | KC-SNM-NK-355 |
| G-356 | KEY-G356 | KC-SM-NK-356 | KC-SNM-NK-356 |
| G-357 | KEY-G357 | KC-SM-NK-357 | KC-SNM-NK-357 |
| G-358 | KEY-G358 | KC-SM-NK-358 | KC-SNM-NK-358 |
| G-359 | KEY-G359 | KC-SM-NK-359 | KC-SNM-NK-359 |
| G-360 | KEY-G360 | KC-SM-NK-360 | KC-SNM-NK-360 |
| G-361 | KEY-G361 | KC-SM-NK-361 | KC-SNM-NK-361 |
| G-362 | KEY-G362 | KC-SM-NK-362 | KC-SNM-NK-362 |
| G-363 | KEY-G363 | KC-SM-NK-363 | KC-SNM-NK-363 |
| G-364 | KEY-G364 | KC-SM-NK-364 | KC-SNM-NK-364 |
| G-365 | KEY-G365 | KC-SM-NK-365 | KC-SNM-NK-365 |
| G-366 | KEY-G366 | KC-SM-NK-366 | KC-SNM-NK-366 |
| G-367 | KEY-G367 | KC-SM-NK-367 | KC-SNM-NK-367 |
| G-368 | KEY-G368 | KC-SM-NK-368 | KC-SNM-NK-368 |
| G-369 | KEY-G369 | KC-SM-NK-369 | KC-SNM-NK-369 |
| G-370 | KEY-G370 | KC-SM-NK-370 | KC-SNM-NK-370 |
| G-371 | KEY-G371 | KC-SM-NK-371 | KC-SNM-NK-371 |
| G-372 | KEY-G372 | KC-SM-NK-372 | KC-SNM-NK-372 |
| G-373 | KEY-G373 | KC-SM-NK-373 | KC-SNM-NK-373 |
| G-374 | KEY-G374 | KC-SM-NK-374 | KC-SNM-NK-374 |
| G-375 | KEY-G375 | KC-SM-NK-375 | KC-SNM-NK-375 |
| G-376 | KEY-G376 | KC-SM-NK-376 | KC-SNM-NK-376 |
| G-377 | KEY-G377 | KC-SM-NK-377 | KC-SNM-NK-377 |
| G-378 | KEY-G378 | KC-SM-NK-378 | KC-SNM-NK-378 |
| G-379 | KEY-G379 | KC-SM-NK-379 | KC-SNM-NK-379 |
| G-380 | KEY-G380 | KC-SM-NK-380 | KC-SNM-NK-380 |
| G-381 | KEY-G381 | KC-SM-NK-381 | KC-SNM-NK-381 |
| G-382 | KEY-G382 | KC-SM-NK-382 | KC-SNM-NK-382 |
| G-383 | KEY-G383 | KC-SM-NK-383 | KC-SNM-NK-383 |
| G-384 | KEY-G384 | KC-SM-NK-384 | KC-SNM-NK-384 |
| G-385 | KEY-G385 | KC-SM-NK-385 | KC-SNM-NK-385 |
| G-386 | KEY-G386 | KC-SM-NK-386 | KC-SNM-NK-386 |
| G-387 | KEY-G387 | KC-SM-NK-387 | KC-SNM-NK-387 |
| G-388 | KEY-G388 | KC-SM-NK-388 | KC-SNM-NK-388 |
| G-389 | KEY-G389 | KC-SM-NK-389 | KC-SNM-NK-389 |
| G-390 | KEY-G390 | KC-SM-NK-390 | KC-SNM-NK-390 |

# Keys

## REPLACEMENT/ADDITIONAL INDIVIDUAL KEYS



### Global G500 Series
*KEY-GL*
- Black Fob; Pre-Cut Keys From G500-G549



### Global G300 Series
*KEY-GL*
- Purple Fob; Pre-Cut Keys From G301-G390

*KEY-BLANK*
- Purple Fob; Un-Cut, Nickel Plated-Brass Key



### Global G391
*KEY-G391*
- Gray Fob; Pre-Cut Global Link Compartment Key



### FIC Series Keys
### CF, EF, HF301-HF351
*KEY-HF*
- Black Fob; Pre-Cut Keys From FIC Series CF, EF, HF301-HF351



### Bauer 300 Series Keys
*KEY-RV*
- Black Fob; Pre-Cut Keys From Bauer Series RV301-RV360

*KEY-RV-BLANK*
- Black Fob; Un-Cut, Bauer 300 Series Key



### Bauer 700 Series Keys
*KEY-RV*
- Black Fob; Pre-Cut Keys From Bauer Series RV701-RV760

*KEY-RV-BLANK700*
- Black Fob; Un-Cut, Bauer 700 Series Key



### Kencon CK330 Key
*KEY-CK330*
- Black Fob; Pre-Cut Key For Kencon Baggage Door Locks



### FIC CW Series Keys
*KEY-CW*
- Pre-Cut Keys From FIC Series CW401-CW434

*KEY-CWBLANK*
- Un-Cut, Nickel Plated-Brass Key



### CH701 Key
*KEY-CH701*
- Pre-Cut Key For Most RV/Camper Screen Doors, Compartment Doors, Storage Locks



### CH751 Key
*KEY-CH751*
- Pre-Cut Key For Most Baggage Door/Cam Locks



### Southco® R001 Key
*KEY-R001*
- Pre-Cut Key For Southco® Baggage Door Locks



### Southco® E3-7-1
*KEY-E3-7-1*
- 8mm Triangle*, Zinc Alloy, Nickel Plated

**This key is also used in many industrial applications, but we make no claim that this key is useful for any specific purpose besides opening an 8mm triangle compression latch. Please make sure that "E3-7-1" or "8mm triangle" is the same code as the key you need, as there is a very similar looking key called the "small triangle key" or "7mm triangle" that is not compatible with this type of key.*



### Southco® E3-3-1
*KEY-E3-3-1*
- 7mm Triangle, Zinc Alloy, Nickel Plated



### Southco® E3-5-15
*KEY-E3-5-15*
- Southco® Tubular, Steel, Nickel Plated



### Southco® E3-26-715-19
*KEY-E3-26-715-19*
- Southco® Tubular, Steel, Nickel Plated



### Southco® E3-9-1
*KEY-E3-9-1*
- 5mm Double Bit, Zinc Alloy, Nickel Plated



### Southco® E3-26-819-15
*KEY-E3-26-819-15*
- Southco® Tubular, Steel, Nickel Plated

## Global Service Keys

**LOCK CYLINDER REMOVAL**
GLD Change Keys allows key dealers or locksmiths to change Global Link cylinders on travel trailer and motorhome locks.

**LOCK ENTRY**
GLD Master Keys allows key dealers or locksmiths to unlock all Global Link master cylinders on travel trailer and motorhome locks.

**AUTHORIZED USE ONLY**
GLD Change Keys and GLD Master Keys are available for authorized dealers or locksmiths and are strictly prohibited from resale.



### G500 Series Master Key
*KEY-MK500*
- Red Fob;
***Dealers and Locksmiths Only***



### G300 Series Master Key
*KEY-MASTER*
- Green Fob;
***Dealers and Locksmiths Only***



### G500 Series Change Key
*KEY-CK500*
- Blue Fob;
***Dealers and Locksmiths Only***



### G300 Series Change Key
*KEY-CHANGE*
- Yellow Fob;
***Dealers and Locksmiths Only***

*INFO@CPGBRANDS.COM*
*888-400-3044*

# KEY CABINETS | KEY RINGS

September 30, 2026

**Cabinet Pricing does not reflect restock prices**



## KEY-GLCABINET500-5K

*Global G500-G549*

- 60 Drawer Key Cabinet
- 5 Keys Each of G500-G549



## KEY-GLCABINET-5K

*Global G301-G350*

- 60 Drawer Key Cabinet
- 5 Keys Each of G301-G350



## KEY-GLCABINET2-5K

*Global G351-G391*

- 60 Drawer Key Cabinet
- 5 Keys Each of G351 - G391
- 5 Keys of #330 Key For Kencon Locks
- 10 Keys of #751 Replacement Key For Camper Locks
- 10 Keys of Replacement Key For Southco Baggage Locks



## KEY-RVCABINET-5K

*Black Fob RV301-RV360*

- 60 Drawer Key Cabinet
- 5 Keys Each of Bauer RV Series Keys (RV301 - RV360)



## KEY-RV700CABINET-5K

*Gray Fob RV701-RV760*

- 60 Drawer Key Cabinet
- 5 Keys Each of Bauer RV Series Keys (RV701 - RV760)



## KEY-HFCABINET-5K

*FIC HF301-HF351*

- 60 Drawer Key Cabinet
- 5 Keys Each of All 51 HF Series Keys (HF301 - HF351)



## KA-DEALERKIT

Key ALike cylinder cabinet with a combination of four key codes with master cylinders, non-master cylinders, keys, change keys, and keyable cam locks

# KEY RINGS



## KEYRING-MASTER

**KEYRING-MASTER** *(Global Link 500 Series Master, Cylinder Change, and Blank Owner Keys; Global Link 300 Series Master, Cylinder Change, G391, and Blank Owner Keys; Bauer 357 Key; Kencon CK330 Key; Southco R001 Key; FIC CW415 Key; CH751 Key)*



## KEY-GLRINGS

**KEY-GLRING500** *(G500-G549; Master, and Change key)*

**KEY-GLRING** *(G301-G350)*

**KEY-GLRING2** *(G351-G391; Master, and Change key, CH751, R001, CK330)*



## KEY-RVRINGS

**KEY-RVRING** *(RV301-RV360)*

**KEY-RVRING700** *(RV701-RV760)*



## KEY-HFRING

**KEY-HFRING** *(FIC HF301-HF351)*



## KEY-CWRING

**KEY-CWRING** *(FIC CW401-CW434)*

# Interior Locksets

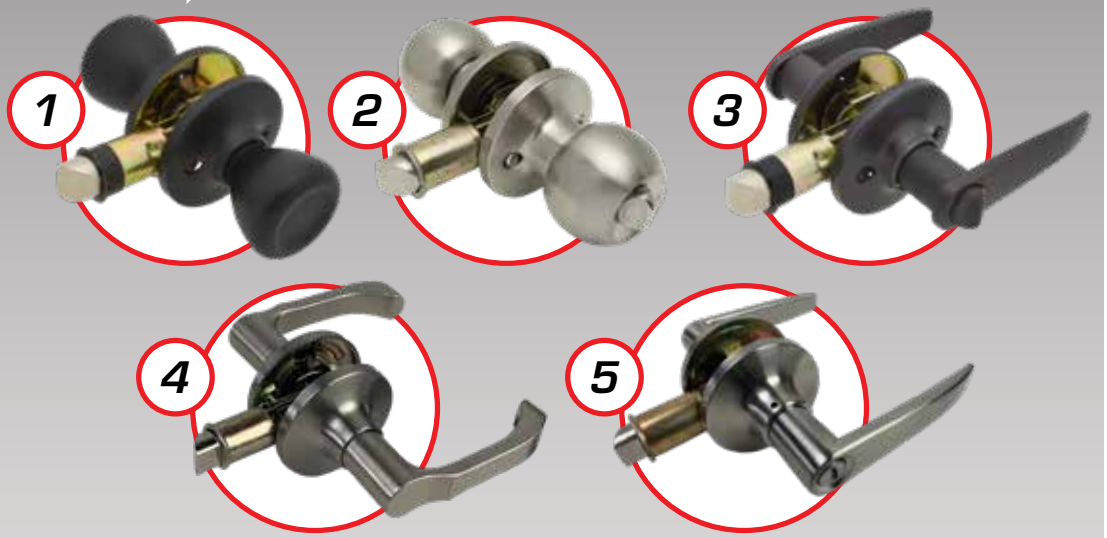


| Style | Part Number | Function | Description | Finish |
|---|---|---|---|---|
| 1 | LSK-C2-B-1PK | Passage | Lockset, Knob, Passage | Brass |
| 1 | LSK-C2-MB-1PK | Passage | Lockset, Knob, Passage | Matte Black |
| 1 | LSK-C2-OWB-1PK | Passage | Lockset, Knob, Passage | Old World Bronze |
| 1 | LSK-C2-SS-1PK | Passage | Lockset, Knob, Passage | Stainless Steel |
| 1 | LSK-C3-B-1PK | Privacy | Lockset, Knob, Privacy | Brass |
| 1 | LSK-C3-MB-1PK | Privacy | Lockset, Knob, Privacy | Matte Black |
| 1 | LSK-C3-OWB-1PK | Privacy | Lockset, Knob, Privacy | Old World Bronze |
| 1 | LSK-C3-SS-1PK | Privacy | Lockset, Knob, Privacy | Stainless Steel |
| 2 | LSB-R2-MB | Passage | Lockset, Round Ball, Passage | Matte Black |
| 2 | LSB-R2-SS | Passage | Lockset, Round Ball, Passage | Stainless Steel |
| 2 | LSB-R3-MB | Privacy | Lockset, Round Ball, Privacy | Matte Black |
| 2 | LSB-R3-SS | Privacy | Lockset, Round Ball, Privacy | Stainless Steel |
| 3 | LSL-707PS-BSN-1PK | Passage | Lockset, Lever, #707 Passage | Brushed Satin Nickel |
| 3 | LSL-707PS-MB-1PK | Passage | Lockset, Lever, #707 Passage | Matte Black |
| 3 | LSL-707PS-OWB-1PK | Passage | Lockset, Lever, #707 Passage | Old World Bronze |
| 3 | LSL-707PV-BSN-1PK | Privacy | Lockset, Lever, #707 Privacy | Brushed Satin Nickel |
| 3 | LSL-707PV-MB-1PK | Privacy | Lockset, Lever, #707 Privacy | Matte Black |
| 3 | LSL-707PV-OWB-1PK | Privacy | Lockset, Lever, #707 Privacy | Old World Bronze |
| 4 | LSL-806PS-MB-1PK | Passage | Lockset, Lever #806 Passage | Matte Black |
| 4 | LSL-806PV-BSN | Privacy | Lockset, Lever #806 Privacy | Brushed Satin Nickel |
| 4 | LSL-806PV-MB-1PK | Privacy | Lockset, Lever #806 Privacy | Matte Black |
| 5 | LSL-909PSAL-BSN-1PK | Passage | Lockset, Lever, Passage, Aluminum | Brushed Satin Nickel |
| 5 | LSL-909PSAL-MB-1PK | Passage | Lockset, Lever, Passage, Aluminum | Matte Black |
| 5 | LSL-909PVAL-BSN-1PK | Privacy | Lockset, Lever, Privacy, Aluminum | Brushed Satin Nickel |
| 5 | LSL-909PVAL-MB-1PK | Privacy | Lockset, Lever, Privacy, Aluminum | Matte Black |

## ADVANTAGES OF CPG LOCKSETS

- Knob and Lever Sets Used by Original Manufacturers
- Passage and Privacy
- Modern Styles and Classic Finishes Available
- For Use on Bathroom and Closet Doors

## Specifications:

***Backset*** 2-3/8″

***Latch*** 7/8″ Drive

***Thickness*** 1-1/8″ to 1-1/2″

## Finishes:


**Matte Black**


**Stainless Steel**


**Brushed Satin Nickel**


**Old World Bronze**


**Brass**

INFO@CPGBRANDS.COM
888-400-3044

# Global PRO

## DOOR HOLDERS AND CATCHES




| Style | Part Number | Size | Description | Color |
|---|---|---|---|---|
| 1 | MAG-BDC200-BLK | 1-3/4" x 1-3/4" | Secure Magnetic Door Holder | Black |
| 2 | BH-RH9644-SS | 2-1/2" x 9/16" x 3/8" | 120 Degree Straight Door Catch | Stainless Steel |
| 2 | BDC-DH812-BLK | 2-1/2" x 3/4" x 1/2" | 120 Degree Straight Door Catch | Black |
| 2 | BDC-DH812-WHT | 2-1/2" x 3/4" x 1/2" | 120 Degree Straight Door Catch | White |
| 3 | BH-DH110-BLK | 2-5/8" x 1" x 5/8" | 110 Degree Curved Door Catch | Black |
| 3 | BH-DH110-GRAY | 2-5/8" x 1" x 5/8" | 110 Degree Curved Door Catch | Gray |
| 3 | BH-DH110-WHT | 2-5/8" x 1" x 5/8" | 110 Degree Curved Door Catch | White |
| 4 | BDC-M109-BLK | 1-3/4" x 3/4" | Magnetic Door Holder | Black |
| 4 | BDC-M109-WHT | 1-3/4" x 3/4" | Magnetic Door Holder | White |
| 5 | DRS-DH312-BLK | 3-1/2" x 1-3/4" x 3/4" | 3-1/2" T-Style Door Hold Back | Black |
| 5 | DRS-DH312-WHT | 3-1/2" x 1-3/4" x 3/4" | 3-1/2" T-Style Door Hold Back | White |
| 5 | DRS-DH6-BLK | 6" x 1-3/4" x 3/4" | 6" T-Style Door Hold Back | Black |
| 5 | DRS-DH6-GRAY | 6" x 1-3/4" x 3/4" | 6" T-Style Door Hold Back | Gray |
| 5 | DRS-DH6-WHT | 6" x 1-3/4" x 3/4" | 6" T-Style Door Hold Back | White |
| 5 | DRS-DH80-WHT | 8" x 1-3/4" x 3/4" | 8" T-Style Door Hold Back | White |
| 5 | DRS-DH601-90D-SS | 6" x 2" x 3/4" | 6" T-Style Door Hold Back w/ 90 Degree Bend | Stainless Steel |
| 6 | DH-BS4-AL | 4" x 1" x 1-1/4" | 4" Ball Socket Door Holder | Aluminum |
| 6 | DH-BS4-BLK | 4" x 1" x 1-1/4" | 4" Ball Socket Door Holder | Black |
| 6 | DH-BS6-BLK | 6" x 1" x 1-1/4" | 6" Ball Socket Door Holder | Black |
| 6 | DH-BS10-AL | 10" x 1" x 1-1/4" | 10" Ball Socket Door Holder | Aluminum |
| 6 | DH-BS10-BLK | 10" x 1" x 1-1/4" | 10" Ball Socket Door Holder | Black |

### SECURE MAGNETIC DOOR HOLDERS

- Simple One Hand Operation
- Magnetic Pin Catch With 80 lb. Pull Force
- UV Resistant Plastic

### MAGNETIC DOOR HOLDERS

- Simple One Hand Operation
- 9 lb. Pull Force
- UV Resistant Plastic

### STRAIGHT/ CURVED DOOR CATCHES

- Spring Retension
- UV Resistant Plastic
- Polished Chrome Stainless Steel Variation

### T-STYLE DOOR HOLDERS

- UV Resistant Plastic

### BALL SOCKET DOOR HOLDERS

- Powder Coated Aluminum

INFO@CPGBRANDS.COM
888-400-3044

# Slide Out Rollers

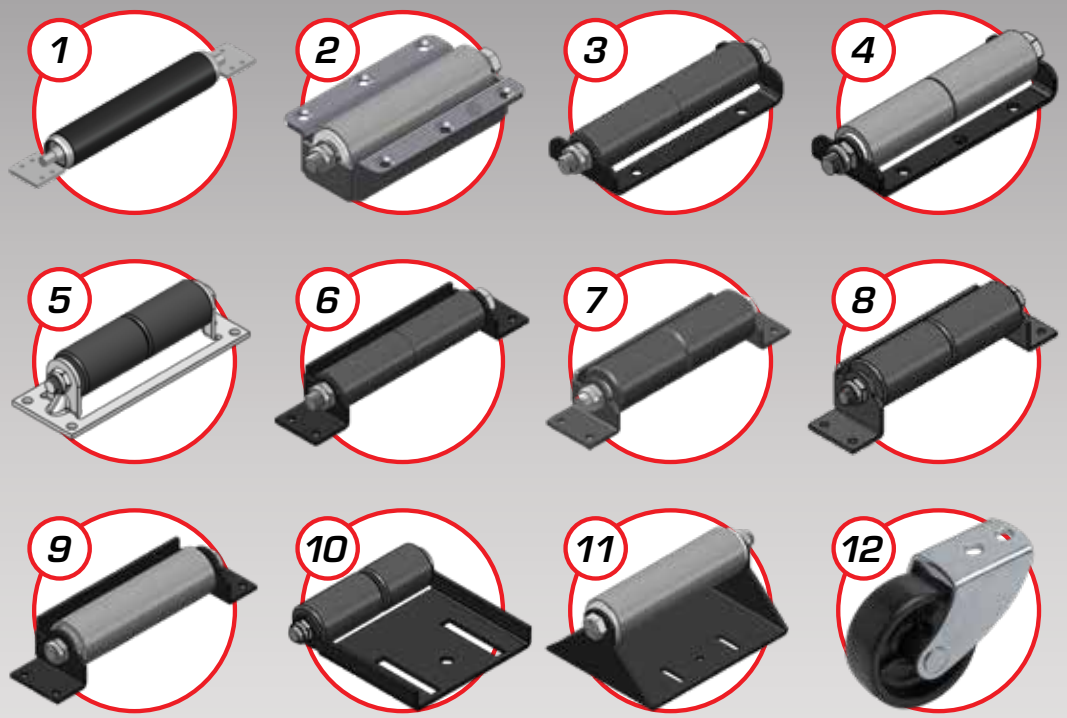


| Part Number | Image | Dimensions L | W | H | Finish | Description |
|---|---|---|---|---|---|---|
| SOR-PRM-822-P | 1 | 13.43 | 1.75 | 1.73 | PLAIN | Partial recess mount; single black nylon conveyor roller |
| SOR-RM-108-Z | 2 | 4.6 | 2.94 | 1.55 | Zinc | Surface mount; single gray nylon roller |
| SOR-SM-205-2006 | 3 | 4.61 | 1.75 | 1.06 | Black | Surface mount; double black nylon roller |
| SOR-SM-225-2006 | 4 | 4.61 | 1.75 | 1.08 | Black | Surface mount; softer double nylon roller |
| SOR-SM-295-2006 | 5 | 4.66 | 2.0 | 1.56 | Black | Surface mount; double roller |
| SOR-SM-310-2006 | 6 | 6.46 | 1.22 | 1.06 | Black | Surface mount; double nylon roller with guard |
| SOR-SM-330-2006 | 7 | 6.3 | 1.5 | 1.25 | Black | Surface mount; double nylon roller with guard |
| SOR-SM-340-2006 | 8 | 6.3 | 1.5 | 1.5 | Black | Surface mount; double nylon roller with guard |
| SOR-SM-399-2006 | 9 | 6.4 | 1.6 | 1.3 | Black | Surface mount; guard and single ball bearing nylon roller |
| SOR-SM-402-2006 | 10 | 4.1 | 4.5 | 1.2 | Black | Surface mount; double rollers |
| SOR-SM-648-2006 | 11 | 4.62 | 3.5 | 2.26 | Black | Surface mount; single gray nylon roller |
| CAS-OY178-Z | 12 | 3 | 1.25 | 2 | Zinc | Door roller; wheel diameter 1-7/8" |

## ADVANTAGES OF CPG SLIDE OUT ROLLERS

- High Quality Steel and Zinc-Plated Mounting Brackets
- Surface and Recess Mounting Styles
- High Strength Steel Bearings and Durable Nylon Polymer Rollers for Consistant Smooth Operation

INFO@CPGBRANDS.COM
888-400-3044

# Global Fasteners



## Flat Head

| Part Number | Description | Color |
|---|---|---|
| SP-612FQA17N-500 | 6 x 1/2 Flat Quad Type 17 | Nickel |
| SP-612FQA17SB-500 | 6 x 1/2 Flat Quad Type 17 | Stat Bronze |
| SP-612FQA17ZB-500 | 6 x 1/2 Flat Quad Type 17 | Black Zinc |
| SP-81FQDTSB-500 | 8 x 1 Flat Quad Deep Thread Type 17 | Stat Bronze |
| SP-81FQDTN-500 | 8 x 1 Flat Quad Deep Thread Type 17 | Nickel |
| SP-81FQDTBO-500 | 8 x 1 Flat Quad Deep Thread Type 17 | Black Ox |



## Pan Head

| Part Number | Description | Color |
|---|---|---|
| SP-612PQA9000-500 | 6 x 1/2 Pan Quad Type A | White |
| SP-612PQA17BO-500 | 6 x 1/2 Pan Quad Type 17 | Black Ox |
| SP-812PQA2000-500 | 6 x 1/2 Pan Quad Type A | Black |
| SP-858PQA2000-500 | 8 x 5/8 Pan Quad Type A | Black |
| SP-858PQA9000-500 | 8 x 5/8 Pan Quad Type A | White |
| SP-81PQF2000-500 | 8 x 1 Pan Quad Fast | Black |
| SP-81PQF9000-500 | 8 x 1 Pan Quad Fast | White |
| SP-8114PQF2000-500 | 8 x 1 1/4 Pan Quad Fast | Black |
| SP-8114PQF9000-500 | 8 x 1 1/4 Pan Quad Fast | White |
| SP-8114PQFZ-500 | 8 x 1 1/4 Pan Quad Fast | Zinc |
| SP-8112PQF2000-500 | 8 x 1 1/2 Pan Quad Fast | Black |
| SP-8112PQF9000-500 | 8 x 1 1/2 Pan Quad Fast | White |
| SP-8112PQFZ-500 | 8 x 1 1/2 Pan Quad Fast | Zinc |



## Pan Head - Self Tapping

| Part Number | Description | Color |
|---|---|---|
| SP-834PQT29000-500 | 8 x 3/4 Pan Quad Tec-2 | White |
| SP-834PQT22000-500 | 8 x 3/4 Pan Quad Tec-2 | Black |
| SP-81PQT2Z-500 | 8 x 1 Pan Quad Tec-2 | Zinc |
| SP-81PQT22000-500 | 8 x 1 Pan Quad Tec-2 | Black |
| SP-81PQT29000-500 | 8 x 1 Pan Quad Tec-2 | White |
| SP-8112PQT22000-500 | 8 x 1 1/2 Pan Quad Tec-2 | Black |
| SP-8112PQT29000-500 | 8 x 1 1/2 Pan Quad Tec-2 | White |
| SP-101PQT32000-500 | 10 x 1 Pan Quad Tec-3 | Black |
| SP-101PQT39000-500 | 10 x 1 Pan Quad Tec-3 | White |
| SP-10112PQT32000-500 | 10 x 1 1/2 Pan Quad Tec-3 | Black |
| SP-10112PQT39000-500 | 10 x 1 1/2 Pan Quad Tec-3 | White |



## Oval

| Part Number | Description | Color |
|---|---|---|
| SP-658OQDT17N-500 | 6 x 5/8 Oval Quad Deep Thread Type 17 | Nickel |
| SP-658OQDT17BO-500 | 6 x 5/8 Oval Quad Deep Thread Type 17 | Black Ox |
| SP-658OQDT17SB-500 | 6 x 5/8 Oval Quad Deep Thread Type 17 | Stat Bronze |
| SP-61OQN-500 | 6 x 1 Oval Quad Fast | Nickel |



## Hex Head

| Part Number | Description | Color |
|---|---|---|
| SP-834HWFZ-500 | 8 x 3/4 Hex Washer Fast | Zinc |
| SP-81HWFZ-500 | 8 x 1 Hex Washer Fast | Zinc |
| SP-81HWF2000-500 | 8 x 1 Hex Washer Fast | Black |
| SP-81HWF9000-500 | 8 x 1 Hex Washer Fast | White |
| SP-8114HWFZ-500 | 8 x 1 1/4 Hex Washer Fast | Zinc |
| SP-8114HWF2000-500 | 8 x 1 1/4 Hex Washer Fast | Black |
| SP-8114HWF9000-500 | 8 x 1 1/4 Hex Washer Fast | White |



## Hex Head - Self Tapping

| Part Number | Description | Color |
|---|---|---|
| SP-834HWT2Z-500 | 8 x 3/4 Hex Washer Tec-2 | Zinc |
| SP-81HWT2Z-500 | 8 x 1 Hex Washer Tec-2 | Zinc |
| SP-8112HWT2Z-500 | 8 x 1 1/2 Hex Washer Tec-2 | Zinc |
| SP-141HWT3Z-500 | 14 x 1 Hex Washer Tec-3 | Zinc |



## Cargo

| Part Number | Description | Color |
|---|---|---|
| SP-516C586LFINZ-500 | 5/16 x 5/8 Flanged 6 Lobe Insert Nut | Zinc |
| SP-38C1T6LTLG2-500 | 3/8 x 1 Truss 6 Lobe G-2 | Zinc |
| SP-1034TOT3SS-500 | 10 x 3/4 Truss Octa Tec-3 | Stainless |
| SP-111TOT32000-500 | 11 x 1 Truss Octa Tec-3 | Black |
| SP-1034TOT3G2-500 | 10 x 3/4 Truss Octa Tec-3 G-2 | Zinc |
| SP-1034TOT3G22000-500 | 10 x 3/4 Truss Octa Tec-3 G-2 | Black |
| SP-1034TOT3G29000-500 | 10 x 3/4 Truss Octa Tec-3 G-2 | White |
| SP-101TOT3G2-500 | 10 x 1 Truss Octa Tec-3 G-2 | Zinc |
| SP-111TOT3G2-500 | 11 x 1 Truss Octa Tec-3 G-2 | Zinc |



## Round Washer Head

| Part Number | Description | Color |
|---|---|---|
| SP-834RWQFZ-500 | 8 x 3/4 Round Washer Quad Fast | Zinc |
| SP-81RWQFZ-500 | 8 x 1 Round Washer Quad Fast | Zinc |
| SP-8114RWQ23DTZ-500 | 8 x 1 1/4 Round Washer Quad 2/3 Deep Thread | Zinc |
| SP-8112RWQ23DTZ-500 | 8 x 1 1/2 Round Washer Quad 2/3 Deep Thread | Zinc |
| SP-82RWQ23DTZ-500 | 8 x 2 Round Washer Quad 2/3 Deep Thread | Zinc |



## Round Washer

| Part Number | Description | Color |
|---|---|---|
| SP-38USSFWZ-500 | 3/8 USS Flat Washer | Zinc |
| SP-38MSLWZ-500 | 3/8 Medium Split Lock Washer | Zinc |
| SP-34ITWZ-500 | 3/4 Internal Tooth Washer | Zinc |
| SP-716MSLWZ-500 | 7/16 Medium Split Lock Washer | Zinc |



## Tools

| Part Number | Description | Color |
|---|---|---|
| 2X2SB-100 | 2 x 2 Square Bit | Zinc |
| 2X3SB-100 | 2 x 3 Square Bit | Zinc |
| 2X6SB-100 | 2 x 6 Square Bit | Zinc |



## Mounting Kit For Bar Locks

| Part Number | Description | Color |
|---|---|---|
| BL-MTG-KIT-100 | Mounting Kit For Bar Locks | Zinc |

### GLOBAL LINK FASTENERS QUANTITIES

Global Link fasteners can be ordered in packs of 500 or in case quantities. Case quantities vary on fasteners size.

# B&B Molders

REPLACEMENT PARTS


































| Image | Category | Description |
|---|---|---|
| 1 | Water Components | Tank Flusher Systems, City Fills, Gravity Fills, Hoses, Shower Boxes and Parts |
| 2 | Nautilus Systems \| Docking Stations | Nautilus P1, P2.5, P3, P4 Complete System Replacement Parts |
| 3 | Diverter Valves | Diverter Valves and Component Replacement Parts |
| 4 | Hatches | Replacement Hatches for Electric, Water, Fuel, Sewer Hose and Multipurpose Spaces |
| 5 | Bumper Plugs | Barbed Bumper Plugs for a Variety of Bumper Sizes |
| 6 | Coax Plates | Single and Dual Coax Replacement Plates in White and Black Colors |
| 7 | Grills \| Vents \| Registers | Replacement Grills, Vents, and Registers in a Variety of Shapes, Sizes and Colors |
| 8 | Gutter Spouts | Short, Medium, and Long Gutter Spouts in White and Black Colors |
| 9 | Extrusion Covers | Complete Line of Replacement Slide-Out Covers |
| 10 | Pipe Fittings and Grommets | Replacement Fittings for Different Pipe Sizes and Functions |
| 11 | Accessories | Interior Conveinence Items Including Hangers, Holders, Guides, and Handles |

## INDIVIDUAL PART REPLACEMENT

- CPG offers an extensive catalog of items from B&B Molders when looking for that specific part to replace
- Item closeout specials
- Full line of Nautilus panels and components




INFO@CPGBRANDS.COM
888-400-3044

# Switches

SIGMA SWITCHES PLUS

**Sigma Switches** manufactures **high-quality switches with patented self-cleaning contacts**—trusted across RV, marine, appliance and electronics industries since 1983.

Now, through CPG Brands, RV owners can install the **same factory-grade switches and controls used by leading OEMs.**




Sigma Switches Labeled ON/OFF Switch Single Pole Single Throw, Black




Sigma Switches Labeled ON/OFF Switch Single Pole Single Throw, White



Sigma Switches Rocker Switch With Blue Light, Black



Sigma Switches Rocker Switch With Red Light, Black



Sigma Switches Rocker Switch With Red Light, White



Sigma Switches Momentary ON/OFF/Momentary ON DPDT Switch, Black



Black Dimmer Switch With Power Switch & Light Level Adjuster



Sigma Switches ON/OFF/Momentary ON DPDT Replacement Switch, Black



Sigma Switches Mini Rocker Switch, Red Light With Black Trim



Sigma Switches RV Momentary ON/OFF/ON SPDT Switch, White



Sigma Switches RV Momentary ON/OFF/ON SPDT Switch, Black



Sigma Switches ON/ON Switch Single Pole Double Throw, White

# Lights

DREAM LIGHTING LED INTERIOR LIGHTING

## Mushroom Dome Lights



***RV INTERIOR CEILING LIGHT/ COOL WHITE - 4000K***

DL-0016264-C4-1PK

- 4-1/2" LED Mushroom Ceiling Light - 12 White Diodes
- Surface Mounted with Snap On Replaceable Lens
- Coated Aluminum Base/Frosted PC Lens
- IP44 Protection Rating / Fire-Resistant Materials
- 13.5V; 5.3W, 350LM
- 4-1/2"Diameter x 7/8"W



***RV INTERIOR CEILING LIGHT WITH SWITCH/COOL WHITE - 4000K***

DL-0016274-C4-1PK

- 4-1/2" LED Mushroom Ceiling Light With Switch - 12 White Diodes
- Surface Mounted with Snap On Replaceable Lens
- Coated Aluminum Base/Frosted PC Lens
- IP44 Protection Rating / Fire-Resistant Materials
- 12V; 5.4W; 420mA; 350LM
- 4-1/2"Diameter x 7/8"W



***RV INTERIOR CEILING LIGHT WITH SWITCH/COOL WHITE - 4000K***

DL-0016273-C4-1PK

- 3-1/2" LED Mushroom Ceiling Light With Switch - 9 White Diodes
- Surface Mounted with Snap On Replaceable Lens
- Coated Aluminum Base/Frosted PC Lens
- IP44 Protection Rating / Fire-Resistant Materials
- 12V; 3.7W; 290mA; 250LM
- 3-1/2"Diameter x 3/4"W



***RV INTERIOR CEILING LIGHT/ ULTRA BRIGHT - 3500K***

DL-0016264CW-1PK

- 4-1/2" LED Mushroom Ceiling Light - 12 White Diodes
- Surface Mounted with Snap On Replaceable Lens
- Coated Aluminum Base/Frosted PC Lens
- IP44 Protection Rating / Fire-Resistant Materials
- 13.5V; 416.9mA; 5.4W, 351LM
- 4-1/2"Diameter x 7/8"W



***RV INTERIOR CEILING LIGHT WITH SWITCH/ULTRA BRIGHT - 3500K***

DL-0016274CW-H-1PK

- 4-1/2" LED Mushroom Ceiling Light With Switch - 12 White Diodes
- Surface Mounted with Snap On Replaceable Lens
- Coated Aluminum Base/Frosted PC Lens
- IP44 Protection Rating / Fire-Resistant Materials
- 12V; 5.4W; 420mA; 350LM
- 4-1/2"Diameter x 7/8"W



***RV INTERIOR CEILING LIGHT WITH SWITCH/ULTRA BRIGHT - 3500K***

DL-0016273CW-H-1PK

- 3-1/2" LED Mushroom Ceiling Light With Switch - 9 White Diodes
- Surface Mounted with Snap On Replaceable Lens
- Coated Aluminum Base/Frosted PC Lens
- IP44 Protection Rating / Fire-Resistant Materials
- 12V; 3.7W; 290mA; 250LM
- 3-1/2"Diameter x 3/4"W

## Recessed Ceiling Lights



***RV INTERIOR RESIDENTIAL STYLE LIGHT/ COOL WHITE - 4000K***

DL-0016294C4-5-1PK

- 4" LED Residential Style Light - 42 White Diodes
- Recessed Mounted with Spring Retaining Clips Fits Inside 5" Cutout
- Powder Coated Aluminum Base/Curved Frosted PC Lens
- 120 Degree Ambient Lighting
- 13.5V; 9W; 520mA; 474LM
- 5-3/4"Diameter x 3/4"W



***RV INTERIOR RESIDENTIAL STYLE LIGHT/ WARM WHITE - 3500K***

DL-0016294CW-5-1PK

- 4" LED Residential Style Light - 42 White Diodes
- Recessed Mounted with Spring Retaining Clips Fits Inside 5" Cutout
- Powder Coated Aluminum Base/Curved Frosted PC Lens
- 120 Degree Ambient Lighting
- 13.5V; 7W; 520mA; 380LM
- 5-3/4"Diameter x 3/4"W



***RV INTERIOR RESIDENTIAL STYLE LIGHT/ COOL WHITE - 4000K***

DL-0016294C4-2-1PK

- 2" LED Residential Style Light - 21 White Diodes
- Recessed Mounted with Spring Retaining Clips Fits Inside 2-1/2" Cutout
- Powder Coated Aluminum Base/Curved Frosted PC Lens
- 120 Degree Ambient Lighting
- 13.5V; 3.5W; 250mA; 154LM
- 3-3/8"Diameter x 3/4"W



***RV INTERIOR RESIDENTIAL STYLE LIGHT/ WARM WHITE - 3500K***

DL-0016294CW-2-1PK

- 2" LED Residential Style Light - 21 White Diodes
- Recessed Mounted with Spring Retaining Clips Fits Inside 2-1/2" Cutout
- Powder Coated Aluminum Base/Curved Frosted PC Lens
- 120 Degree Ambient Lighting
- 13.5V; 3.5W; 250mA; 144LM
- 3-3/8"Diameter x 3/4"W

# Motion Pancake Lights



***RV INTERIOR MOTION LIGHT WITH SWITCH/COOL WHITE - 4000K***

**DL-0016048-C4-BLACK-1PK**

- 6" LED Pancake Light With Motion Sensor And Three-Phase Switch - 12 White Diodes
- Surface Mounted with Snap On Replaceable Lens
- Black Base/Frosted PC Rated Lenses
- IP44 Protection Rating / Fire-Resistant Materials
- 12V; 4.5W; 350mA; 310LM
- 6"L x 3-1/2"W x 1"H



***RV INTERIOR MOTION LIGHT WITH SWITCH/COOL WHITE - 4000K***

**DL-0016048-C4-1PK**

- 6" LED Pancake Light With Motion Sensor And Three-Phase Switch - 12 White Diodes
- Surface Mounted with Snap On Replaceable Lens
- White Base/Frosted PC Rated Lenses
- IP44 Protection Rating / Fire-Resistant Materials
- 12V; 4.5W; 350mA; 310LM
- 6"L x 3-1/2"W x 1"H



***RV INTERIOR MOTION LIGHT WITH SWITCH/ULTRA BRIGHT - 3500K***

**DL-0016048CW-1PK**

- 6" LED Pancake Light With Motion Sensor And Three-Phase Switch - 12 White Diodes
- Surface Mounted with Snap On Replaceable Lens
- White Base/Frosted PC Rated Lenses
- IP44 Protection Rating / Fire-Resistant Materials
- 12V; 4.5W; 350mA; 300LM
- 6"L x 3-1/2"W x 1"H

# Pancake Lights



***RV INTERIOR DOUBLE PANCAKE LIGHT WITH SWITCH/ULTRA BRIGHT - 3500K***

**DL-0016045CW-1PK**

- 9" LED Double Pancake Light With Switch - 18 White Diodes
- Surface Mounted with 2 Snap On Replaceable Lenses
- White Base/Frosted PC Rated Lenses
- IP44 Protection Rating / Fire-Resistant Materials
- 13.5V; 7.4W; 580mA; 450LM
- 9"L x 3-7/8"W x 1-1/4"H



***RV INTERIOR SINGLE PANCAKE LIGHT WITH SWITCH/ULTRA BRIGHT - 3500K***

**DL-0016043CW-1PK**

- 6" LED Pancake Light With Switch - 12 White Diodes
- Surface Mounted with Snap On Replaceable Lens
- White Base/Frosted PC Rated Lenses
- IP44 Protection Rating / Fire-Resistant Materials
- 13.5V; 4.5W; 350mA; 300LM
- 6"L x 3-1/2"W x 1"H

# Reading Lights



***FLEXIBLE READING LIGHT WITH PROGRAMMED SWITCH/WARM WHITE/BLUE - 3000K***

**DL-0012153WS-BLACK-1PK**

- 6-1/8" Flexible 360 Degree Multi-Direction Reading Light
- Surfaced Mounted
- Black Aluminum Housing/Acrylic Crystal Shade
- IP44 Protection Rating
- 13.5V; 2W; 150mA; 100LM
- 6-1/8"L x 2-3/8" Base Width



***FLEXIBLE READING LIGHT WITH USB CHARGE PORT/COOL WHITE - 6000K***

**DL-0012155-USB-CNB-1PK**

- 6-1/4" Flexible 360 Degree Multi-Direction Reading Light
- Surfaced Mounted
- Black Aluminum Housing/Acrylic Crystal Shade
- IP44 Protection Rating
- 13.5V; 2W; 150mA; 100LM
- 6-1/4"L x 2-3/8" Base Width

# Courtesy/Step/Cabinet Lights



***RV COURTESY STEP LIGHT/WARM WHITE - 3000K***

**DL-0011202W-1PK**

- 2-1/4" LED Square Step Light - 3 Warm White Diodes
- Surface Mounted with Snap On Black Shell
- Frosted PC Base/Black Shell Cover
- IP66 Protection Rating / Water And Dust Proof / UV-Resistant Materials
- 12V; 0.2W; 14LM
- 2-1/4"L x 2-1/4"W x 1/2"H (1/4" Profile)



***RV COURTESY MOTION SENSOR STEP LIGHT/ULTRA BRIGHT - 3500K***

**DL-0011203UB-S-1PK**

- 2-1/4" LED Square Step Light with Infrared Sensor - 3 White Diodes
- Surface Mounted with Snap On Black Shell
- Frosted PC Base/Black Shell Cover
- IP55 Protection Rating / Water And Dust Proof / UV-Resistant Materials
- 13.5V; 0.2W; 15mA; 28LM
- 2-1/4"L x 2-1/4"W x 3/4"H



***RV BASIC STEP LIGHT/COOL WHITE - 6000K***

**DL-0011502C-L-1PK**

- 2-5/8" LED Companion Way Light - 3 Cool White Diodes
- Surface Mounted with Snap On Black Shell
- Frosted PC Base/Black Shell Cover
- IP66 Protection Rating / Water And Dust Proof / UV-Resistant Materials
- 12V; 0.2W; 15mA
- 2-5/8"L x 1-1/4"W x 1"H



***LED CABINET SENSOR LIGHT/COOL WHITE - 6000K***

**DL-CLS1-703B-1PK**

- 2-1/4" LED Cabinet Light with Sensor - 6 Cool White Diodes
- Surface Mounted
- Black Base/Frosted PC Rated Lens
- 13.5V; 0.4W; 30mA; 25LM
- 3"L x 1"W x 1"H

# Lights

D-LIGHTING LED EXTERIOR LIGHTING

## Awning Lights



***AWNING LIGHT/AMBER***
DL-0013552A-1PK
- 10" Single LED Row Awning Light
- Waterproof Sealed Circuit Board
- Aluminum Triangle Shaped Base - Black
- IP66 Protection Rating
- 12V; 2.5W
- 10"L x 1-5/8"W x 1-1/4"H



***AWNING LIGHT/AMBER LIGHT***
DL-123-1535-A-1PK
- 10" Single LED Row Awning Light with Frosted Polycarbonate Lens
- Waterproof Sealed Circuit Board
- Aluminum Triangle Shaped Base - Black
- IP55 Protection Rating
- 12V; 5.8W; 490mA; 32LM
- 10"L x 1-5/8"W x 1-1/4"H



***SLIM WATERPROOF AWNING LIGHT/ ULTRA BRIGHT - 3500K***
DL-EA1CW-B-1PK
- 10" Slim Line LED Awning Light
- Waterproof Sealed Circuit Board
- Aluminum Triangle Shaped Base - Black
- IP65 Protection Rating
- 12V; 5.4W; 270LM
- 10"L x 1"W x 3/4"H



***AWNING LIGHT/COOL WHITE - 6000K***
DL-0013552C-1PK
- 10" Double LED Row Awning Light
- Waterproof Sealed Circuit Board
- Aluminum Triangle Shaped Base - Black
- IP66 Protection Rating
- 12V; 5.1W; 400mA; 350LM
- 10"L x 1-5/8"W x 1-1/4"H



***AWNING LIGHT/COOL WHITE - 6000K***
DL-123-1535-C-1PK
- 10" Single LED Row Awning Light with Frosted Polycarbonate Lens
- Waterproof Sealed Circuit Board
- Aluminum Triangle Shaped Base - Black
- IP55 Protection Rating
- 12V; 5.8W; 490mA; 330LM
- 10"L x 1-5/8"W x 1-1/4"H



***HEAVY DUTY AWNING LIGHT/ COOL WHITE - 6000K***
DL-0013712C-B-1PK
- 7.8" Heavy Duty Awning Light with Super Bright LEDs
- Waterproof Sealed Circuit Board
- Reinforced Aluminum Triangle Shaped Base - Black
- IP66 Protection Rating
- 12V; 11W; 920mA; 720LM
- 7.8"L x 1-5/16"W x 1-5/8"H

## Porch Lights



***ANGLED PORCH LIGHT/ CLEAR LENS***
DL-PL-1CLBSW-1PK
- 6-3/8" 12 Diode LED Porch Light with Switch
- Surface Mounted with Foam Gasket
- Black Base/Clear Lens
- IP55 Protection Rating
- 12V; 4W; 300LM
- 6-3/8"L x 3-1/2"W x 1-3/4"H



***ANGLED PORCH LIGHT/ AMBER LENS***
DL-PL-2ALBSW-1PK
- 6-3/8" 12 Diode LED Porch Light with Switch
- Surface Mounted with Foam Gasket
- Black Base/Amber Lens
- IP55 Protection Rating
- 12V; 4W; 300LM
- 6-3/8"L x 3-1/2"W x 1-3/4"H

## License Plate Brackets



***LICENSE LIGHT AND BRACKET/BLACK***
DL-IDL1BB-1PK
- 2 Cool White Diodes
- One-Piece Design / Easy Surface Mount Installation
- Black Base
- DOT Approved / J587 SAE Rating
- 12V; 0.4W; 11LM
- 8-1/4"L x 2"W x 2-1/4"H



***LICENSE LIGHT AND BRACKET/WHITE***
DL-IDL1BB-WHITE-1PK
- 2 Cool White Diodes
- One-Piece Design / Easy Surface Mount Installation
- White Base
- DOT Approved / J587 SAE Rating
- 12V; 0.4W; 11LM
- 8-1/4"L x 2"W x 2-1/4"H



### *RECTANGLE CLEARANCE LIGHT/AMBER*
**DL-3110101A-1PK**
- 3-7/8" LED PC Rated Rectangular Clearance Light - 2 Sealed Amber Diodes
- Surface Mounted with Snap On Replaceable Lens
- Black Base/Amber PC Rated Lens with Reflex
- IP55 Protection Rating / J2042-2000 SAE Rating
- 12V
- 3-7/8"L x 1-7/8"W x 1-7/8"H



### *RECTANGLE CLEARANCE LIGHT/RED*
**DL-3110101R-1PK**
- 3-7/8" LED PC Rated Rectangular Clearance Light - 2 Sealed Red Diodes
- Surface Mounted with Snap On Replaceable Lens
- Black Base/Red PC Rated Lens with Reflex
- IP55 Protection Rating / J2042-2000 SAE Rating
- 12V
- 3-7/8"L x 1-7/8"W x 1-7/8"H



### *OVAL CLEARANCE LIGHT/ AMBER*
**DL-CM03-B-SRA-1PK**
- 4" LED PC2 Rated Oval Clearance Light - 1 Sealed Amber Diode
- Surface Mounted with Snap On Replaceable Lens
- Black Base/Amber PC2 Rated Lens with Reflex
- DOT Approved / J2042-2000 SAE Rating
- 12V; 0.4W, 6LM
- 4"L x 1-5/8"W x 1/4"H



### *OVAL CLEARANCE LIGHT/ RED*
**DL-CM03-B-SRR-1PK**
- 4" LED PC2 Rated Oval Clearance Light - 1 Sealed Red Diode
- Surface Mounted with Snap On Replaceable Lens
- Black Base/Red PC2 Rated Lens with Reflex
- DOT Approved / J2042-2000 SAE Rating
- 12V; 0.4W, 3LM
- 4"L x 1-5/8"W x 1/4"H



### *DIAMOND CLEARANCE LIGHT/ AMBER*
**DL-CMB2SRA-1PK**
- 4-1/2" LED PC2 Rated Diamond Clearance Light - 2 Sealed Amber Diodes
- Surface Mounted with Snap On Replaceable Lens
- Black Base/Amber PC2 Rated Lens with Reflex
- DOT Approved / J2042-2000 SAE Rating
- 12V; 0.3W, 4.2LM
- 4-1/2"L x 1-3/4"W x 3/4"H



### *DIAMOND CLEARANCE LIGHT/ RED*
**DL-CMB2SRR-1PK**
- 4-1/2" LED PC2 Rated Diamond Clearance Light - 2 Sealed Red Diodes
- Surface Mounted with Snap On Replaceable Lens
- Black Base/Red PC2 Rated Lens with Reflex
- DOT Approved / J2042-2000 SAE Rating
- 12V; 0.3W, 4.2LM
- 4-1/2"L x 1-3/4"W x 3/4"H



### *ROUND CLEARANCE LIGHT/ AMBER*
**DL-CMB1SRA-1PK**
- 2-1/2" LED PC2 Rated Round Clearance Light - 1 Sealed Amber Diode
- Surface Mounted with Snap On Replaceable Lens
- Black Base/Amber PC2 Rated Lens with Reflex
- DOT Approved / J2042-2000 SAE Rating
- 12V; 0.3W, 2LM
- 2-1/2"Diameter x 1/2"H



### *ROUND CLEARANCE LIGHT/ RED*
**DL-CMB1SRR-1PK**
- 2-1/2" LED PC2 Rated Round Clearance Light - 1 Sealed Red Diode
- Surface Mounted with Snap On Replaceable Lens
- Black Base/Red PC2 Rated Lens with Reflex
- DOT Approved / J2042-2000 SAE Rating
- 12V; 0.3W, 2LM
- 2-1/2"Diameter x 1/2"H

## *Mini Marker/Clearance Lights*



### *BULLET LIGHT/AMBER LED/ AMBER LENS*
**DL-CM75A-1PK**
- 3/4" LED Bullet Light
- Waterproof and Rustproof
- Recessed Press-Fit Design
- IP66 Protection Rating / J2042-2000 SAE Rating
- 12V; 6LM
- 3/4"Diameter x 7/8"H (1/4" Profile)



### *BULLET LIGHT/AMBER LED/ CLEAR LENS*
**DL-CM75AC-1PK**
- 3/4" LED Bullet Light
- Waterproof and Rustproof
- Recessed Press-Fit Design
- IP66 Protection Rating / J2042-2000 SAE Rating
- 12V; 6LM
- 3/4"Diameter x 7/8"H (1/4" Profile)



### *BULLET LIGHT/RED LED/ RED LENS*
**DL-CM75R-1PK**
- 3/4" LED Bullet Light
- Waterproof and Rustproof
- Recessed Press-Fit Design
- IP66 Protection Rating / J2042-2000 SAE Rating
- 12V; 3LM
- 3/4"Diameter x 7/8"H (1/4" Profile)

## *Tail Light*



### *RED ROUND TAIL LIGHT COMBO*
**DL-3110501R-1PK**
- 5-3/8" LED Round Tail Running/Stop/Turn Light - 10 Red Diodes
- Surface Mounted Sealed Waterproof/ Dustproof Lens Assembly
- Black Base/Red PC Rated Lens with Reflex
- DOT Approved / J2040-2002, J593-2003, J2261 SAE Rating
- 12V; 4W; 57LM
- 5-3/8"Diameter x 1"H (5/8" Profile)

# Lights

D-LIGHTING LED EXTERIOR LIGHTING

## Stop/Turn/Tail Lights



### TAIL LIGHT COMBO WITH BRACKET/DRIVER SIDE

DL-TC1SR2D-1PK

- 7-7/8" LED Tail Running/Stop/Turn/ License Plate Light with Bracket - 12 Red Diodes
- Surface Mounted with Snap On Replaceable Lens
- Clear Base with Bracket/Red PC Rated Lens with Reflex
- FMVSS 108 Compliant / J2261, J2040-2002, J594-2003, J587 SAE Rating
- 8-5/8"L x 1-1/4"W x 4-1/4"H



### TAIL LIGHT COMBO/ PASSENGER SIDE

DL-TC1SR2P-1PK

- 7-7/8" LED Tail Running/Stop/Turn Light - 12 Red Diodes
- Surface Mounted with Snap On Replaceable Lens
- Clear Base/Red PC Rated Lens with Reflex
- FMVSS 108 Compliant / J2261, J2040-2002, J594-2003 SAE Rating
- 7-7/8"L x 1-1/4"W x 3"H



### TAIL LIGHT COMBO WITH BACK-UP FUNCTION AND BRACKET/ DRIVER SIDE

DL-TCBU2SR2D-1PK

- 7-7/8" LED Tail Running/Stop/Turn/Reverse/ License Plate Light with Bracket - 12 Red Diodes/6 White Diodes
- Surface Mounted with Snap On Replaceable Lens
- Clear Base with Bracket/Red PC Rated Lens with Reflex
- FMVSS 108 Compliant / J2261, J2040-2002, J594-2003, J587, J593-2000 SAE Rating
- 8-5/8"L x 1-1/4"W x 4-1/4"H



### TAIL LIGHT COMBO WITH BACKUP FUNCTION/ PASSENGER SIDE

DL-TCBU2SR2P-1PK

- 7-7/8" LED Tail Running/Stop/Turn/ Reverse Light - 12 Red Diodes/6 White Diodes
- Surface Mounted with Snap On Replaceable Lens
- Clear Base/Red PC Rated Lens with Reflex
- FMVSS 108 Compliant / J2261, J2040-2002, J594-2003, J593-2000 SAE Rating
- 7-7/8"L x 1-1/4"W x 3"H



### FB OVAL TAIL LIGHT COMBO WITH BRACKET/DRIVER SIDE

DL-TCRM4-D-1PK

- 9-1/2" LED Tail Running/Stop/Turn/ License Plate Light with Bracket - 19 Red Diodes
- Surface Mounted with Foam Gasket and Snap On Replaceable Lens
- Clear Base with Bracket/Red PC Rated Lens with Reflex
- FMVSS 108 Compliant / J2261, J2040-2002, J594-2003, J587 SAE Rating
- 9-1/2"L x 1-1/4"W x 5-1/4"H



### TAIL LIGHT COMBO/ PASSENGER SIDE

DL-TCRM4-P-1PK

- 9-1/2" LED Tail Running/Stop/Turn/ License Plate Light - 19 Red Diodes
- Surface Mounted with Foam Gasket and Snap On Replaceable Lens
- Clear Base/Red PC Rated Lens with Reflex
- FMVSS 108 Compliant / J2261, J2040-2002, J594-2003 SAE Rating
- 9-1/2"L x 1-1/4"W x 4"H



### FB OVAL TAIL LIGHT COMBO WITH BACKUP FUNCTION AND BRACKET/DRIVER SIDE

DL-TCBURM4-D-1PK

- 9-1/2" LED Tail Running/Stop/Turn/ Reverse/License Plate Light with Bracket - 16 Red Diodes/9 White Diodes
- Surface Mounted with Foam Gasket and Snap On Replaceable Lens
- Clear Base with Bracket/Red PC Rated Lens with Reflex
- FMVSS 108 Compliant / J2261, J2040-2002, J594-2003, J587, J593-2000 SAE Rating
- 9-1/2"L x 1-1/4"W x 5-1/4"H



### FB OVAL TAIL LIGHT COMBO WITH BACKUP FUNCTION/ DRIVER SIDE

DL-TCBURM4-P-1PK

- 9-1/2" LED Tail Running/Stop/Turn/ Reverse Light - 16 Red Diodes/9 White Diodes
- Surface Mounted with Foam Gasket and Snap On Replaceable Lens
- Clear Base/Red PC Rated Lens with Reflex
- FMVSS 108 Compliant / J2261, J2040-2002, J594-2003, J593-2000 SAE Rating
- 9-1/2"L x 1-1/4"W x 4"H



### ROUND TAIL LIGHT COMBO WITH BRACKET/DRIVER SIDE

DL-TCRM3-RVD-1PK

- 6" LED Tail Running/Stop/Turn/License Plate Light with Bracket - 10 Red Diodes
- Surface Mounted with Foam Gasket and Snap On Replaceable Lens
- Clear Base with Bracket/Red PC Rated Lens with Reflex
- FMVSS 108 Compliant / J2261, J2040-2002, J594-2003, J587 SAE Rating
- 8"L x 1-1/4"W x 7"H



### ROUND TAIL LIGHT COMBO/ PASSENGER SIDE

DL-TCRM3-RVP-1PK

- 6" LED Tail Running/Stop/Turn Light- 10 Red Diodes
- Surface Mounted with Foam Gasket and Snap On Replaceable Lens
- Clear Base/Red PC Rated Lens with Reflex
- FMVSS 108 Compliant / J2261, J2040-2002, J594-2003 SAE Rating
- 6"Diameter x 1-1/4"W



### OVAL TAIL LIGHT WITH RED REFLECTOR TRIM RING

DL-T6SR1-1PK

- 7-3/4" LED Tail Running/Stop/Turn Light - 7 Red Diodes
- Surface Mounted Sealed Waterproof/ Dustproof Lens Assembly
- Black Base/Red PC Rated Lens with RFX6 Reflector Ring
- DOT Approved / J2040-2002, J2261, J594-2003 SAE Rating
- 7-3/4"L x 3/4"W x 3-1/2"H



### OVAL TAIL LIGHT WITH BACKUP FUNCTION AND RED REFLECTOR TRIM RING

DL-T6SR2-BU-1PK

- 7-3/4" LED Tail Running/Stop/Turn/ Reverse Light - 14 Red Diodes/9 White Diodes
- Surface Mounted Sealed Waterproof/ Dustproof Lens Assembly
- Black Base/Red PC Rated Lens with RFX6 Reflector Ring
- DOT Approved / J2040-2002, J593-2003, J2261, J594-2003 SAE Rating
- 7-3/4"L x 3/4"W x 3-1/2"H

# Lights

## COMMAND ELECTRONICS EXTERIOR LIGHTING



Command LED RV Oval Tail Light W/ Backup & License Plate Bracket



Command LED Sealed Triple Tail Light



Command Stop-Tail-Turn Light W/ License Plate Bracket, Black



Command LED Sealed Elliptical Tail Light With Backup Light



Command Electronics LED Rectangle Clearance Light, Red Lens W/ White Base



Command RV Rounded Rectangle Clearance Light, Amber Lens, White Base



Command LED Surface Mount Ceiling Light With Switch



Command LED Motion Step Light, Blue LED



Command LED Recess Mount Ceiling/Under Cabinet Light



Command 4.4" Recess Mount RV LED Ceiling/Under-Cabinet Light



Command Incandescent Interior Dome Light



Command Incandescent Interior Double Dome Light



Command LED Ceiling / Under-Cabinet Light, Warm White, White Base



Command LED Ceiling/Under-Cabinet Light With Switch, Warm White, White Base



Command Electronics 4.5" LED Surface Mount Ceiling Light



Command 4.5" Frosted Replacement Lens



Command Bunk Light With Fan



Command Bunk Light Replacement Lens, Clear



Command 12 V Power Port For Command Bunk Fan/Light



Command Omega RV Porch Light, Amber

# Dealer Resources

PLANOGRAMS, DISPLAYS, AND KITS







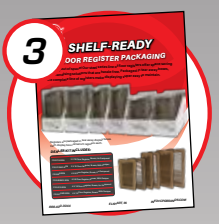











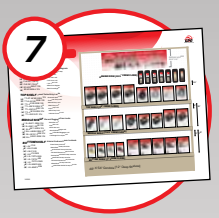














| Image | Part Number | Description |
|---|---|---|
| 1 | TTLBT-COUNTER-DISPLAY | 12" x 16" Counter top display card featuring Ultra PRO line lock features |
| 2 | TABLETENT-DISPLAY | Table Tent featuring RV key availability |
| 3 | CPG-PSS-PART# | 8 1/2 X 11 Product sales flyers with highlights and features |
| 4 | CPG-SUPPORTGUIDES | Instruction sheets, measurement guidelines, quick setup guides, and new product announcements |
| 5 | DIS-GLP-1 | Global PRO Series lock wire rack display (Entry, Interior, and Cam locks) |
| 6 | DIS-GPS-HEADER | Display header for the Global PRO Series lineup of products |
| 6 | DIS-TTLBT-HEADER | Display header for the Ultra ES Bluetooth entry lock |
| 7 | DIS-GLP-2 | Global PRO Series lock gondola display (Entry, Interior, and Cam locks) |
| 8 | DIS-TTLBT-SPECIAL | Global PRO Series Bluetooth Special lock gondola display (Entry, Interior) |
| 9 | KA-DEALERKIT | Key ALike 18 drawer cabinet with cylinders, keys, and cam locks in the G300 key code series |
| 10 | DSK-1 | Service Shop Screw kit with 25 most used fasteners in 500 piece packs |
| 11 | CPG-CATALOG | CPG Product catalog |

## HELPING OUR DEALERS

- **Counter Top Displays** give great information to engage conversations about CPG products
- **Dealer Kits** organize and keep most-used CPG products handy for customer support
- **Dealer Displays** have a small physical footprint when retail space is limited
- **Sales Sheets** include new product announcements, product highlights, user instructions, and measurement guides
- **Planogram Programs** offer CPG top-selling products at discounted dealer pricing for gondolas and other retail spaces

INFO@CPGBRANDS.COM
888-400-3044

# Notes

## CPG Contact Info


CPG BRANDS
TRUSTED BRANDS FOR EVERY RV

700 Patricia Court
Elkhart, IN 46516

**888-400-3044**

***Chris Carpenter***
***Outside Sales | Business Development***
*chris.carpenter@cpgbrands.com*
*574-343-3123*

***Erika Baker***
***Operations Manager***
*erika.baker@cpgbrands.com*

***Brian Green***
***Purchasing Manager***
*brian.green@cpgbrands.com*
*574-606-6705*

***Deb Cupp***
***Customer Service Manager***
*deb.cupp@cpgbrands.com*
*574-361-3770*

***Todd Peterson***
***Marketing Manager***
*todd.peterson@cpgbrands.com*
*574-304-0683*

***Theil Luangasa***
***Order Entry | Customer Service***
*theil.luangasa@cpgbrands.com*

# CPG BRANDS

**TRUSTED BRANDS FOR EVERY RV**









**888-400-3044**

*INFO@CPGBRANDS.COM*
*WWW.CPGBRANDS.COM*

*700 PATRICIA COURT*
*ELKHART, IN 46516*